DH-SDT4E425-4F-GB-A-PV1

X-Spans 4MP+4MP 25x TiOC WizSense Network PTZ Camera

- Panorama: 1/2.8" 4Megapixel F1.0 CMOS.
- Detail: 1/2.8"4Megapixel STARVIS™ CMOS.
- 25x optical zoom.
- Max. 25/30fps@4M.
- IR distance up to 100 m.
- Auto tracking 3.0.
- Smart tracking.
- Perimeter protection and Face detection
- Active deterrence.
- Smart dual light +.

Launched by Dahua Technology, WizSense is a series of AI products and solutions that adopt independent AI chip and deep learning algorithm. It focuses on human and vehicle with high accuracy, enabling users to fast act on defined targets. Based on Dahua's advanced technologies, WizSense provides intelligent, simple and inclusive products and solutions.

System Overview

Designed with more lens than the conventional PTZ camera, the X-Spans series camera captures an expansive view, producing wide, vivid images. It has the combined power of the panoramic and detail camera in its structure and is highly cost-effective, greatly reducing the installation cost of security systems. It also leverages its two cameras to perform smart tracking, and has an independent mode that allows you to separately use each camera.

Functions

Starlight Technology
For challenging low-light conditions, Dahua's Starlight Ultra-low Light Technology offers the best in light sensitivity, capturing color in vivid detail, even in lighting as low as 0.005 lux. The camera uses a set of optical features to balance light throughout the scene, producing clear images in dark environments.

Smart Tracking
The panoramic camera links with the detail camera to track targets. When the target enters the panoramic area, the detail camera starts to monitor them and tracks their movement by rotating, zooming and focusing the PTZ camera lens. This allows the camera to produce highly detailed images with the movement of targets for security personnel.

Smart H.265+ & Smart H.264+
With advanced scene-adaptive rate control algorithm, Dahua smart encoding technology realizes the higher encoding efficiency than H.265 and H.264, provides high-quality video, and reduces the cost of storage and transmission.

Perimeter Protection
Automatically filters out false alarms caused by animals, rustling leaves, bright lights, and more, and uses secondary recognition during target detection to improve alarm accuracy.

Protection (IP66, TVS 6000 V)
IP66, TVS 6000 V lightning proof, surge protection, and voltage transient protection.

Smart Dual Light +
Both the panoramic camera and detail camera support smart dual light. In intelligent illumination mode, the channels of both cameras can switch together from one type of image to another. When a target enters the panoramic area, both channels switch from displaying black and white images to color images at the same time. After the target leaves, they both simultaneously switch back to black and white.

Technical Specification

Camera

Image Sensor	Panorama: 1/2.8" CMOS; Detail: 1/2.8" CMOS
Pixel	Panorama: 4 MP; Detail: 4 MP
Max. Resolution	Panorama: 2560 (H) × 1440 (V); Detail: 2560 (H) × 1440 (V)
ROM	Panorama: 4 GB; Detail: 4 GB
RAM	Panorama: 1 GB; Detail: 1 GB
Electronic Shutter Speed	Panorama: 1/3s-1/100000s; Detail: 1s-1/30000s
Scanning System	Progressive
Min. Illumination	Panorama: 0.001 lux@F1.0 (Color, 30 IRE); 0.0005 lux@F1.0 (B/W, 30 IRE); 0 lux (illuminator on); Detail: 0.005 lux@F1.6 (Color, 30 IRE); 0.0005 lux@ F1.6 (B/W, 30 IRE); 0 lux (illuminator on)
Illumination Distance	Panorama: 30 m (98.43 ft) (IR); 30 m (98.43 ft) (white light); Detail: 100 m (328.08 ft) (IR) 50 m (164.04 ft) (white light)
Illuminator On/Off Control	Panorama: Auto; Manual; Off; Detail: Zoom Prio; Auto; Manual; Off
Illuminator Number	Panorama: 2 (IR); 2 (white light); Detail: 2 (IR); 2 (dual light Fusion)

Lens

Focal Length	Panorama: 2.8 mm; Detail: 5 mm–125 mm
Max. Aperture	Panorama: F1.0; Detail: F1.6–F3.6
Field of View	Panorama: H: 101°; V: 53°; D: 120°; Detail: H: 51.9°–3.0°; V: 39.7°–2.2°; D: 63.1°–3.7°
Optical Zoom	Panorama: NA; Detail: 25×
Focus Control	Auto; semi-auto; manual
Close Focus Distance	Panorama: 0.2 m (0.66 ft); Detail: 0.1 m–0.5 m (0.33 ft–1.64 ft)
Iris Control	Auto; manual

DORI Distance	Detect	Observe	Recognize	Identify
	2500 m (8202.10 ft)	987.5 m (3239.83 ft)	500 m (1640.42 ft)	250 m (820.21 ft)

*DORI (Detect, Observe, Recognize, Identify) is a standard system (EN-62676-4) for defining the ability of a person viewing the video to distinguish persons or objects within a covered area. The numbers in this table do not reflect intelligent function distances. For intelligent function distances, refer to installation and commissioning manual/project design tool.

PTZ

Pan/Tilt Range	Panorama camera: Tilt: 13° to 23°; Detail camera: Pan: 0° to 360° endless; Tilt: –15° to 90°, auto flip 180°
Manual Control Speed	Pan: 0.1°/s–200°/s; Tilt: 0.1°/s–120°/s
Preset Speed	Pan: 240°/s; Tilt: 200°/s
Preset	300
Tour	8 (up to 32 presets per tour)
Pattern	5
Scan	5
Power-off Memory	Yes
Idle Motion	Pattern; Preset; Scan; Tour

Intelligence

IVS (Perimeter Protection)	Tripwire; intrusion; climbing fences; loitering detection; abandoned/missing object; fast moving; parking detection; people gathering; vehicle/human alarm classification; linking the detail camera to track objects
Auto Tracking	Yes
SMD	SMD4.0
Face detection	Yes

Active Deterrence

Light Warning	Red-blue light warning Flash duration: 5 s–30 s Flash frequency: high, medium, low
Sound Warning	Offers 11 sound alarms and supports importing custom sound alarms.

Video

Video Compression	H.265; H.264B; H.264; H.264H; MJPEG(Sub Stream 1); smart H.265+; smart H.264+
Streaming Capability	3 streams
Resolution	Panorama: 4M (2560 × 1440); 3M (2048 × 1536); 3M (2304 × 1296); 1080P (1920 × 1080); 1.3M (1280 × 960); 720P (1280 × 720); D1 (704 × 576/704 × 480); VGA (640 × 480); CIF (352 ×288/352 × 240) Detail: 4M (2560 × 1440); 3M (2048 × 1536); 3M (2304 × 1296); 1080P (1920 × 1080); 1.3M (1280 × 960); 720P (1280 × 720); D1 (704 × 576/704 × 480); VGA (640 × 480); CIF (352 × 288/352 × 240)
Video Frame Rate	Main stream: 4 MP/3 MP/1080p/1.3 MP/720p@ (1–25/30 fps) Sub stream 1: D1/CIF/VGA@(1–25/30 fps) Sub stream 2: 1080p/1.3 MP/720p@(1–25/30 fps)
Bit Rate Control	CBR/VBR
Video Bit Rate	H264: 96 Kbps–14848 Kbps H265: 38 Kbps–8960 Kbps
Day/Night	Auto (ICR)/Color/B/W
BLC	Yes
WDR	120 dB
HLC	Yes
White Balance	Auto; indoor; outdoor; tracking; manual; sodium lamp; natural light; street lamp
Gain Control	Auto; manual
Noise Reduction	2D NR; 3D NR
Motion Detection	Yes

Region of Interest (RoI)	Yes
Image Stabilization	EIS
Defog	Electronic
Digital Zoom	16×
Image Rotation	180°
S/N Ratio	≥ 55 dB

Audio

Audio Compression	PCM; G.711a; G.711Mu; G.726; MPEG2-Layer2; G722.1; G729; G723

Network

Network Port	RJ-45 (10/100 Base-T)
Network Protocol	FTP; RTMP; IPv6; Bonjour; IPv4; DNS; RTCP; PPPoE; NTP; RTP; 802.1x; HTTPS; SNMP; TCP/IP; DDNS; UPnP; NFS; ICMP; UDP; IGMP; HTTP; SSL; DHCP; SMTP; Qos; RTSP; ARP
Interoperability	ONVIF(Profile S&G&T);CGI;SDK
Streaming Method	Unicast/Multicast
User/Host	20 (total bandwidth: 64 M)
Storage	Micro SD card (512 GB); FTP/SFTP; NAS
Browser	IE 9 and later versions; Chrome 41 and later versions; Firefox 50 and later versions; Safari 10 and later versions
Management Software	DMSS; DSS Pro
Mobile Client	iOS; Android

Certification

Certifications	CE: EN55032/EN55024/EN50130-4

Port

Audio Input	1 channel (LINE IN, bare wire)
Audio Output	Audio Output: 1 channel (LINE OUT, bare wire); built-in speaker (mutually exclusive)
Alarm Input	2 (on-off value input: 0–5 VDC)
Alarm Output	1
Alarm Linkage	Capture; recording; send email; preset; tour; pattern; alarm digital input; audio; warning light
Alarm Event	Motion/tampering detection; audio detection; network disconnection detection; IP conflict detection; memory card state detection; memory space detection

Power

Power Supply	12 VDC, 3 A ± 10%; PoE+ (802.3at)
Power Consumption	Basic: 12 W Max. (Basic power consumption + illuminator+sound and light warning +PTZ operation + Heater): 25 W (12 VDC)

Environment

Operating Temperature	–40 °C to +65 °C (–40 °F to +149 °F)
Operating Humidity	≤ 95%
Protection	TVS 6000 V lightning proof;IP66; surge protection; voltage transient protection

Structure

Product Dimensions	160.0 mm × 184.4 mm × 304.6 mm (6.30" × 7.26" × 11.99")(L × W × H)
Net Weight	3.41 kg (7.52 lb)

Ordering Information

Type	Model	Description
4MP 25X TiOC WizSense Network PTZ Camera	DH-SDT4E425-4F-GB-A-PV1	X-Spans 4MP+4MP 25x TiOC WizSense Network PTZ Camera
	SDT4E425-4F-GB-A-PV1	X-Spans 4MP+4MP 25x TiOC WizSense Network PTZ Camera
Accessories	PFB305W	Wall Mount Bracket
	DC12V/3A	Power Adapter
	PFA126	Mount Adapter
	PFA111	Mount Adapter
	PFB300C	Ceiling Mount Bracket
	PFB301C	Ceiling Mount Bracket
	PFA151	Corner Mount Bracket
	PFA150	Pole Mount Bracket
	PFB303S	Parapet Mount Bracket
	PFB301S-E	Plane Mount Bracket

Accessories

Included:

PFB305W
Wall Mount
Bracket

Optional:

DC12V/3A
Power Adapter

PFA126
Mount Adapter

PFA111
Mount Adapter

PFB300C
Ceiling Mount
Bracket

PFB301C
Ceiling Mount Bracket

PFA151
Corner Mount Bracket

PFA150
Pole Mount Bracket

PFB303S
Parapet Mount Bracket

PFB301S-E
Plane Mount Bracket

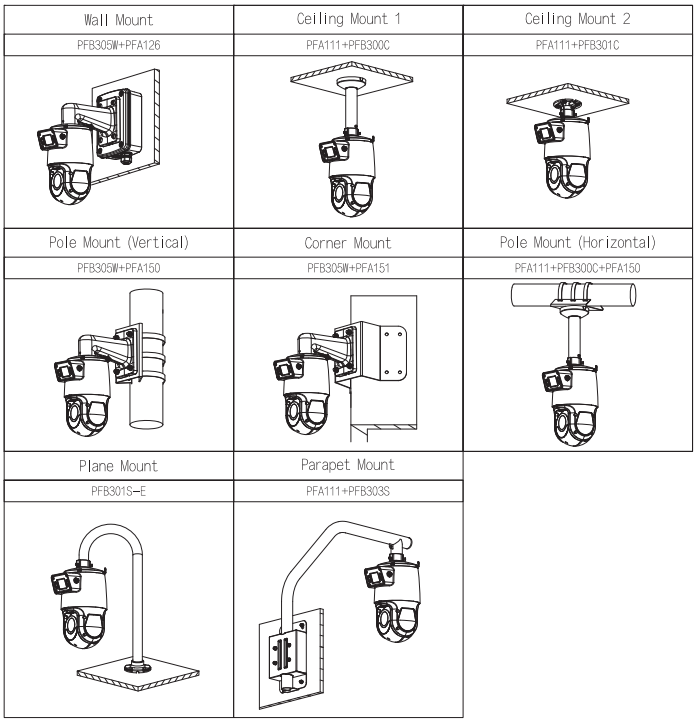

Dimensions (mm[inch])

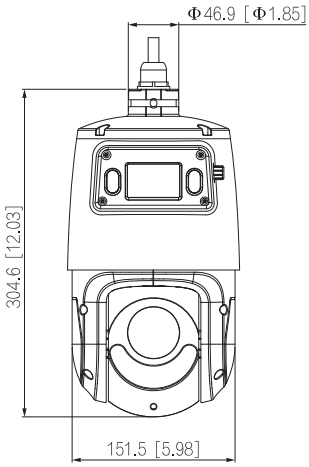

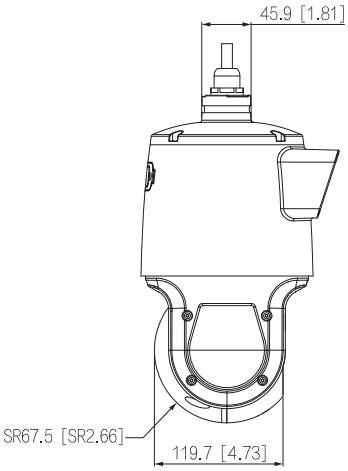

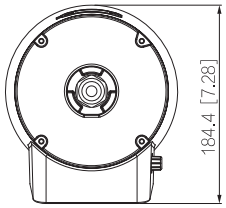

© 2025 Dahua. All rights reserved. Design and specifications are subject to change without notice.
The images, specifications and information mentioned in the document are only for reference, and might differ from the actual product.